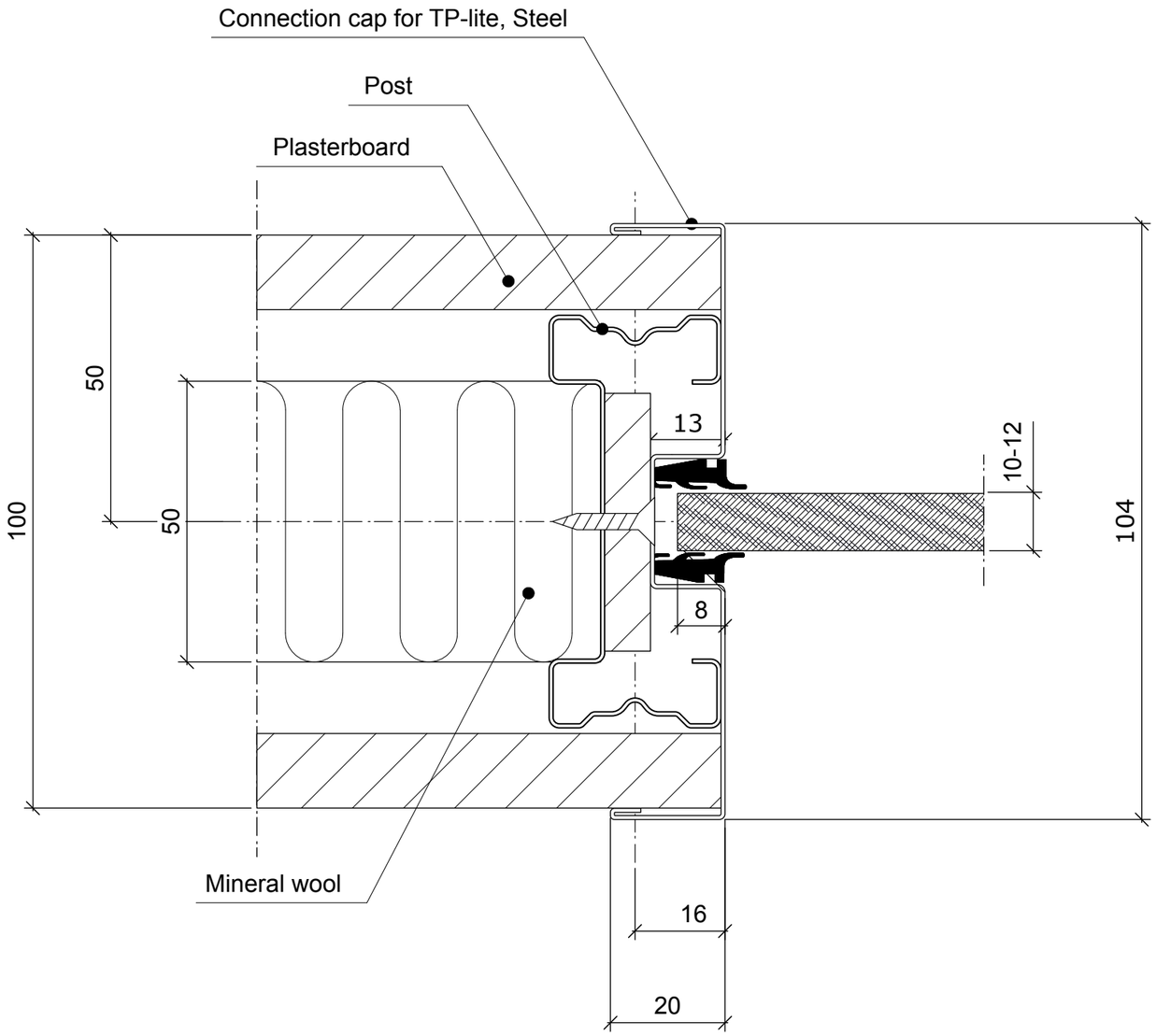

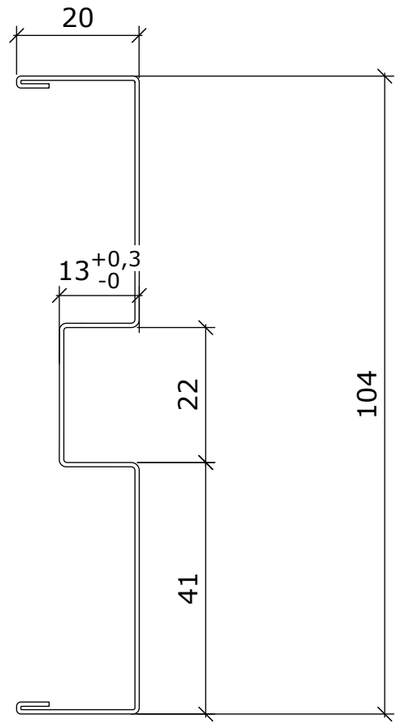

Materials Used		
Item no.	Item	Dimension
-	Glass	10 mm.
00002	Connection cap for TP Lite	20x104mm
11202	Post	72 x 30
15101	Plasterboard	13 mm.
16001	Mineral wool	30 Kg/m3
17002	Countersunk screw	15
17256	Tightening strip	4-6 mm

Remarks:

Revisions:

Triplan® OFFICE PARTITIONS	Case: Subject: Module joint, Horizontal section, TP Lite Connecting cap, Glass / Plasterboard	Draw. no.: **212.10.1078** Scale: 1:1 Case no.: Date: 18/04/07, MA Rev. date: 04.01.13, bn

Triplan International A/S - Industriskellet 12, 2635 Ishoej - Phone: 4353 9999, Fax: 4353 8888 - www.triplan.net, tech@triplan.net