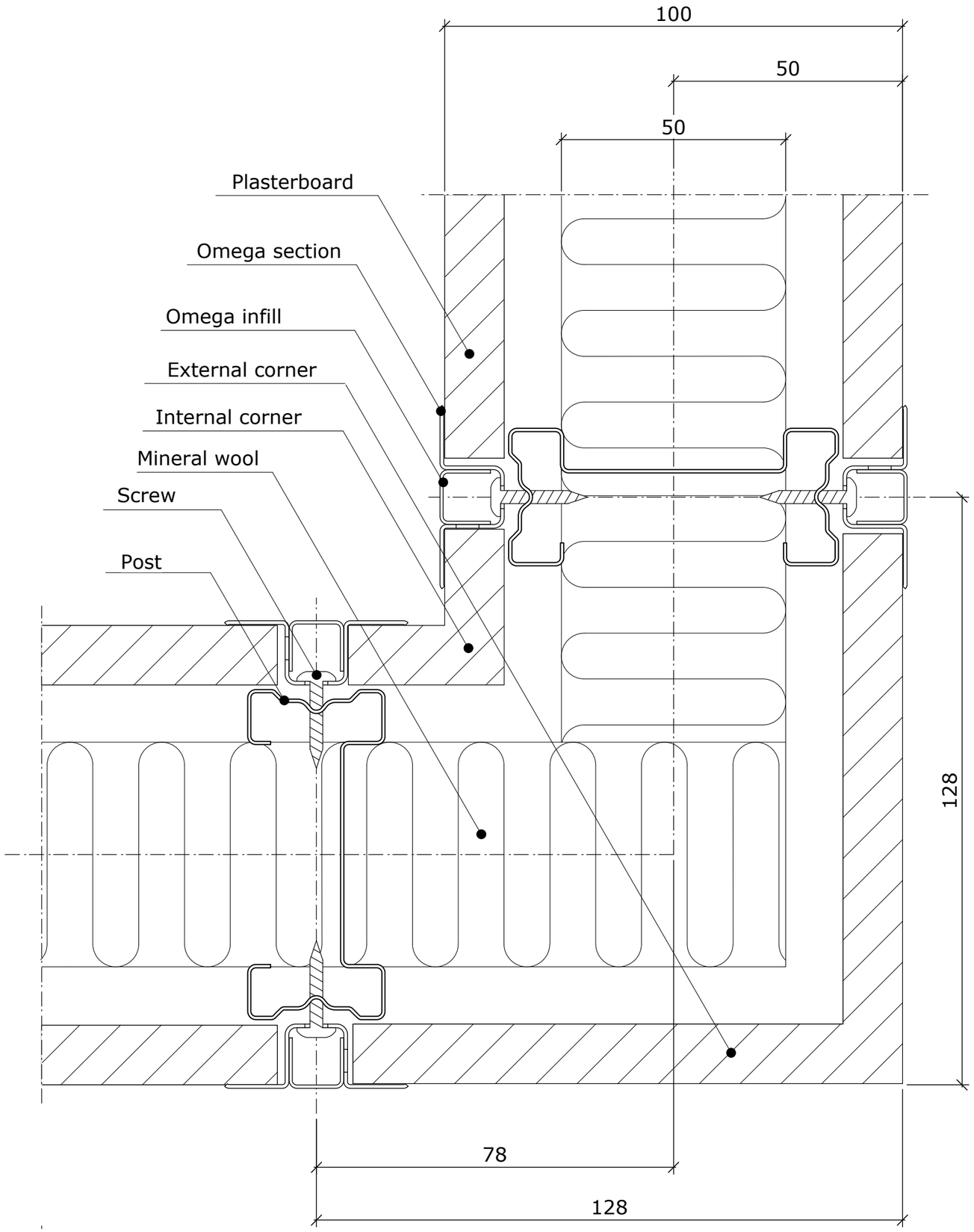

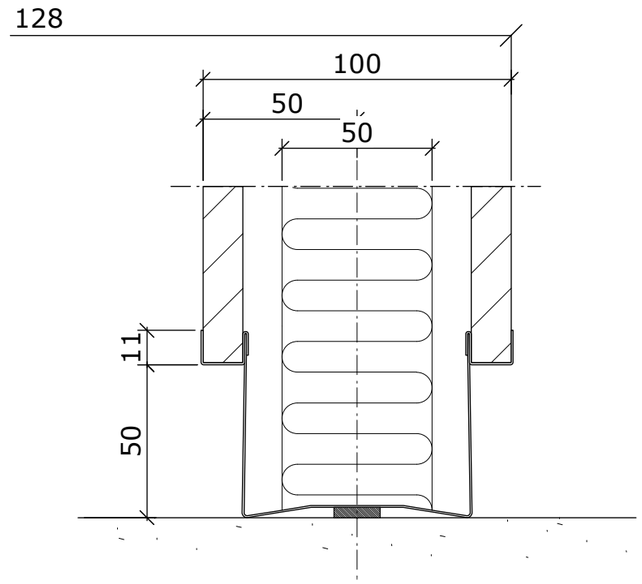

Materials Used		
Item no.	Item	Dimension
11202	Post	72 x 30
12001	Omega section	40 x 14
12101	Omega filler	12 x 9
15101	Plasterboard	13 mm.
15416	90° Corner, external, Steel coated plasterboard	120 x 120
15417	90° Corner, internal, steel coated plasterboard	21 x 21
16001	Mineral wool	30 Kg/m3
17001	Screw	19

Remarks:

Revisions:

Triplan® OFFICE PARTITIONS

Case:

Subject: Corner, Horizontal section, Flexica Plasterboard/ 90° Corner/ Plasterb.

Draw. no.: **210.79.1004**

Scale: 1:1

Case no.:

Date: 06/09/01, wg

Rev. date: 19/09/06, msa

Triplan International A/S - Industriskellet 12, 2635 Ishoej - Phone: 4353 9999, Fax: 4353 8888 - www.triplan.net, tech@triplan.net